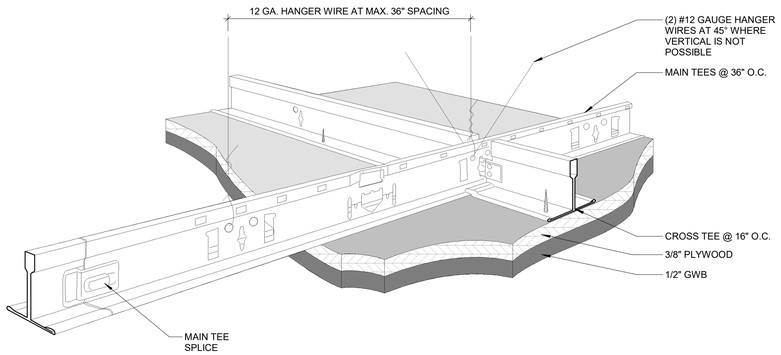

2 GWB TYPICAL CEILING SUSPENSION DETAIL
N.T.S.

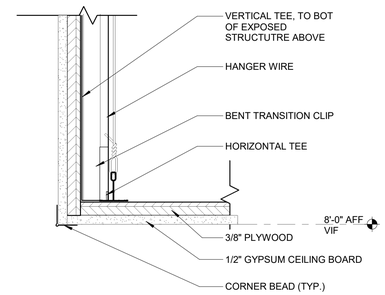

5 TYP. SOFFIT DETAIL
3" = 1'-0"

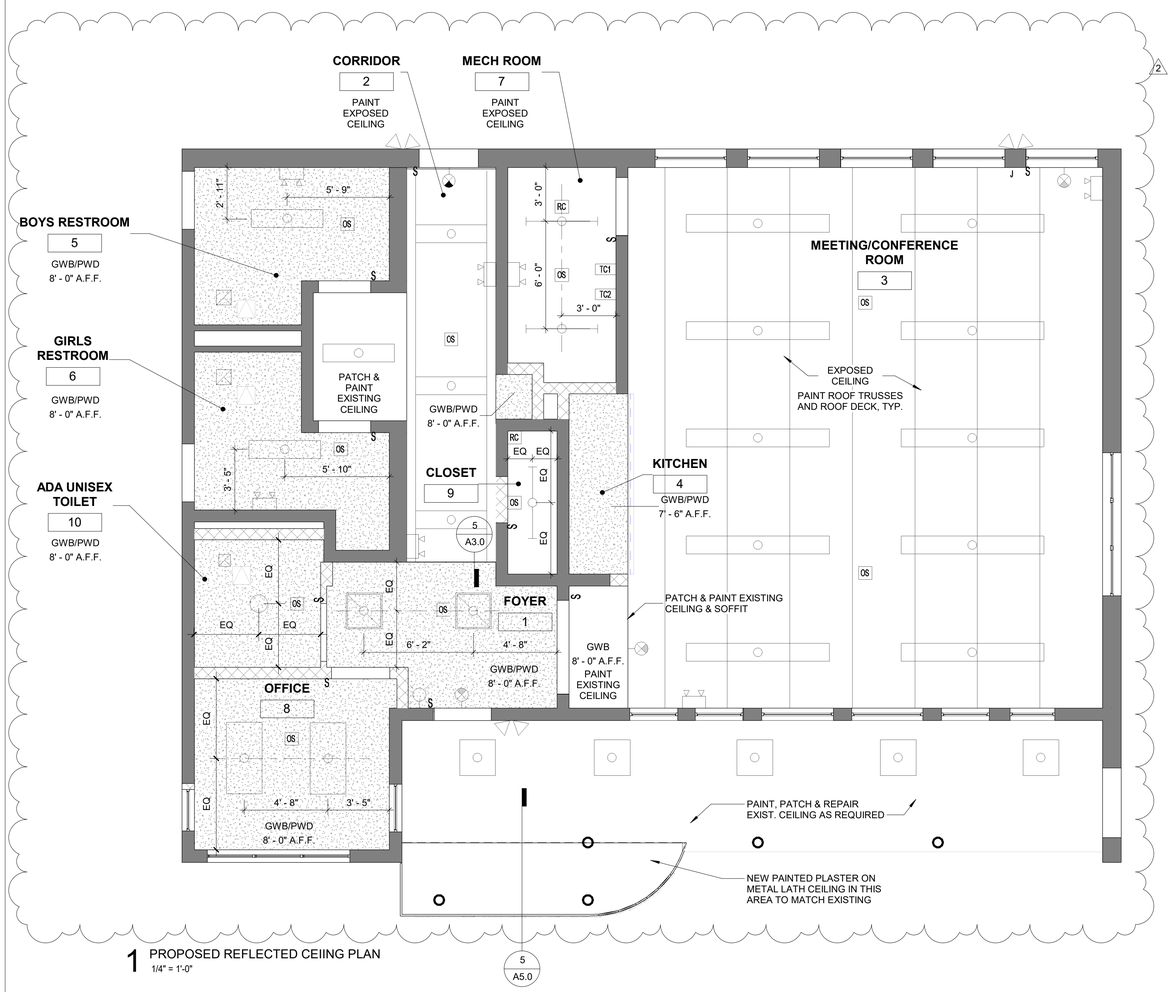

1 PROPOSED REFLECTED CEIING PLAN
1/4" = 1'-0"

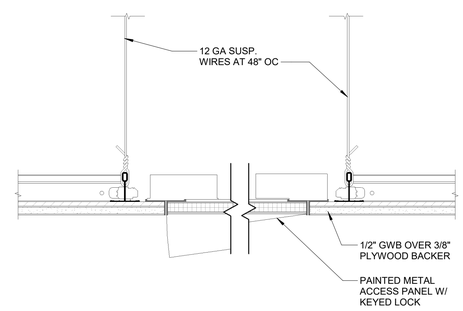

4 TYPICAL GYPSUM CEILING ASSEMBLY DETAIL
3" = 1'-0"

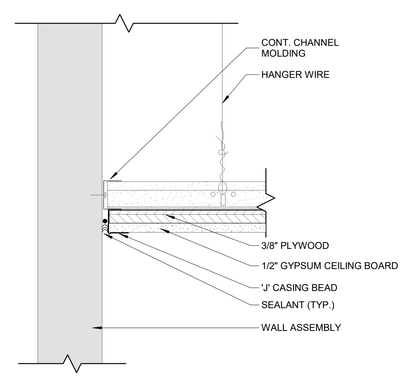

3 TYP. GYPSUM CEILING ASSEMBLY EDGE DETAIL
3" = 1'-0"

GENERAL CONSTRUCTION NOTES

1. CONTRACTOR SHALL FIELD VERIFY ALL DIMENSIONS BEFORE START OF WORK. NOTIFY ARCHITECT IN WRITING OF ALL DISCREPANCIES BEFORE START OF WORK.
2. INTERIOR DIMENSIONS ARE TO FINISHED FACE OF WALL SURFACE.
3. ALL DOOR JAMBS AT HINGE SIDE TO BE SET 6" FROM ADJACENT WALL (MIN.) OR AS OTHERWISE NOTED.
4. ALL FLOORING TRANSITIONS SHALL OCCUR AT CENTERLINE OF CLOSED DOOR, TYPICAL UNO.
5. REFERENCE FINISH SCHEDULE FOR FINISH SPECIFICATIONS.
6. CONTRACTOR SHALL PROVIDE AND INSTALL WALL BLOCKING AS REQUIRED TO SUPPORT ALL WALL HUNG CABINETRY, WALL-HUNG FIXTURES, COUNTERTOPS, SHELVING, AND ACCESSORIES. CONTRACTOR TO COORDINATE CLEARANCES FOR ALL BACK TO BACK FIXTURES.
7. CONFIRM ALL MEASUREMENTS. ALIGN FACE OF NEW CONSTRUCTION WITH FACE OF EXISTING CONSTRUCTION UNO.
8. FLUSH LEVER ON TOILET TO BE LOCATED ON LAVATORY SIDE.
9. REFER TO SHEET G0.2, FOR ALL PLUMBING FIXTURES AND ACCESSORIES MOUNTING HEIGHTS.
10. PROTECT ALL EXISTING ITEMS TO REMAIN DURING ALL PHASES OF DEMOLITION AND CONSTRUCTION.
11. SEE PLUMBING DRAWINGS FOR TOILET ROOM FIXTURE SCHEDULE.
12. REFER TO SHEET A7.0 FOR TOILET ROOM ACCESSORIES SCHEDULE.
13. PATCH AND REPAIR EXTERIOR MASONRY WALL SURFACES AND FINISH SURFACES WITH CEMENT PLASTER TO MATCH EXISTING.
14. PRIME ALL NEW AND PATCHED EXTERIOR WALL SURFACES TO RECEIVE FINISH COATS. FINISH COATS BY OTHERS, UNO.
15. FOR WINDOW AND DOOR TYPES SEE SHEET A7.0.
16. COORDINATE ALL OPENINGS IN CMU WALLS WITH MECHANICAL AND STRUCTURAL.
17. VERIFY STRUCTURAL JOIST DIMENSIONS.

RCP SHEET NOTES

1. SEE ELECTRICAL/POWER DRAWINGS FOR ADDITIONAL INFORMATION.
2. SEE MECHANICAL DRAWINGS FOR CEILING SUPPLY, DIFFUSERS, CABINET HEATER UNITS, AND LOCATIONS OF ACCESS PANELS REQUIRED FOR MECHANICAL EQUIPMENT.
3. PROVIDE BLOCKING AND UNISTRUT FRAMING AS REQUIRED ABOVE SUSPENDED CEILING FOR LIGHT FIXTURE AND MECHANICAL SUPPORTS.
4. CEILING HEIGHTS ARE MEASURED FROM FINISH FLOOR TO UNDERSIDE OF CEILING.
5. COORDINATE ALL DUCTS, PIPING, LIGHTS ETC. IN ORDER TO MAINTAIN LOCATION OF ALL CEILING HEIGHTS AS INDICATED. ANY DEVICATION FROM THE DRAWINGS MUST BE NOTED TO THE ARCHITECT IN WRITING AND APPROVED PRIOR TO INSTALL ATION, NO EXCEPTIONS.
6. ALL EXISTING SPACES WITH NEW REPLACEMENT CEILINGS, G.C. IS TO MATCH EXISTING CEILING HEIGHTS.
7. PAINT UNDERSIDE OF EXPOSED ROOF DECK AND ROOF TRUSSES.
8. PATCH ALL CEILING OPENED OR DAMAGED AS PART OF CONSTRUCTION WORK.
9. PAINT ALL AREAS OF EXPOSED CEILING INCLUDING ROOF STRUSSES AND SUPPORTS.
10. NOT USED.

LEGEND

- EXIT SIGN
- EXHAUST VENT
- J — JUNCTION BOX
- OS — OCCUPANCY SENSOR
- LOACKABLE 12" X 12" ACCESS PANEL. COORDINATE LOCATION OF ALL ACCESS PANELS WITH MECHANICAL.
- NEW 1/2" GWB AND 3/8" PLYWOOD CEILING ON SUPPORT STRUCTURE, PAINTED
- LIGHTING FIXTURE
- LIGHTING FIXTURE
- LIGHTING FIXTURE
- LIGHTING FIXTURE
- WALL MOUNTED EMERGENCY LIGHT
- WALL MOUNTED EXTERIOR LIGHT

4' 2' 0' 4' 8'

REVISIONS

ISSUE	DATE	DESCRIPTION
1	3/6/20	Addendum #2
2	3/9/20	Addendum #3

PROJECT COORDINATOR

Philadelphia Parks & Recreation
and Department of Public Property
1515 Arch Street, 11th Floor
Philadelphia, PA 19102
Contact: Sara Nordstrom, 215-683-0253

SEAL

PROJECT TEAM

ARCHITECT:

JOHNSON, MIRMIRAN & THOMPSON, INC
1600 MARKET ST, SUITE 520
PHILADELPHIA, PA 19103
267.256.0300

STRUCTURAL ENGINEER:

JOHNSON, MIRMIRAN & THOMPSON, INC
1600 MARKET ST, SUITE 520
PHILADELPHIA, PA 19103
267.256.0300

SYSTEMS ENGINEER:

JOHNSON, MIRMIRAN & THOMPSON, INC
1600 MARKET ST, SUITE 520
PHILADELPHIA, PA 19103
267.256.0300

CITY OF PHILADELPHIA

REBUILD PHILADELPHIA AND
PHILADELPHIA PARKS & RECREATION

1515 ARCH STREET
11TH FLOOR, ONE PARKWAY BUILDING
PHILADELPHIA, PENNSYLVANIA

PROJECT TITLE
MILES MACK BUILDING RENOVATION

DRAWING TITLE
REFLECTED CEILING PLANS

PROJECT NO. 10-20-XXXX-01
DATE: 02.07.2020
SCALE: AS NOTED
DRAWN BY:
CHECKED BY:
DRAWING NO. A3.0
FILE:

NOTE: ALL DIMENSIONS AND CONDITIONS SHALL BE VERIFIED BY THE CONTRACTOR AT THE SITE BEFORE PROCEEDING WITH THE WORK.